MW-12A

Microplate Washer

Operator’s Manual

© 2007-2012 Shenzhen Mindray Bio-Medical Electronics Co., Ltd. All rights Reserved.

For this Operator's Manual, the issue date is 2012-10

Intellectual Property Statement

SHENZHEN MINDRAY BIO-MEDICAL ELECTRONICS CO., LTD. (hereinafter called Mindray) owns the intellectual property rights to this Mindray product and this manual. This manual may refer to information protected by copyright or patents and does not convey any license under the patent rights or copyright of Mindray, or of others.

Mindray intends to maintain the contents of this manual as confidential information. Disclosure of the information in this manual in any manner whatsoever without the written permission of Mindray is strictly forbidden.

Release, amendment, reproduction, distribution, rental, adaptation, translation or any other derivative work of this manual in any manner whatsoever without the written permission of Mindray is strictly forbidden.

mindray , MET , OmniLab , DigiPrince , MINDRAY

BeneView, WATO, BeneHeart, are the trademarks, registered or otherwise, of Mindray in China and other countries. All other trademarks that appear in this manual are used only for informational or editorial purposes. They are the property of their respective owners.

Responsibility on the Manufacturer Party

Contents of this manual are subject to change without prior notice.

All information contained in this manual is believed to be correct. Mindray shall not be liable for errors contained herein or for incidental or consequential damages in connection with the furnishing, performance, or use of this manual.

Mindray is responsible for the effects on safety, reliability and performance of this product, only if:

- all installation operations, expansions, changes, modifications and repairs of this product are conducted by Mindray authorized personnel;
- the electrical installation of the relevant room complies with the applicable national and local requirements; and
- the product is used in accordance with the instructions for use.

WARNING:

It is important for the hospital or organization that employs this equipment to carry out a reasonable service/maintenance plan. Neglect of this may result in machine breakdown or personal injury.

NOTE:

This equipment must be operated by skilled/trained clinical professionals.

Warranty

THIS WARRANTY IS EXCLUSIVE AND IS IN LIEU OF ALL OTHER WARRANTIES, EXPRESSED OR IMPLIED, INCLUDING WARRANTIES OF MERCHANTABILITY OR FITNESS FOR ANY PARTICULAR PURPOSE.

Exemptions

Mindray's obligation or liability under this warranty does not include any transportation or other charges or liability for direct, indirect or consequential damages or delay resulting from the improper use or application of the product or the use of parts or accessories not approved by Mindray or repairs by people other than Mindray authorized personnel.

This warranty shall not extend to:

- Malfunction or damage caused by improper use or man-made failure.
- Malfunction or damage caused by unstable or out-of-range power input.
- Malfunction or damage caused by force majeure such as fire and earthquake.
- Malfunction or damage caused by improper operation or repair by unqualified or unauthorized service people.
- Malfunction of the instrument or part whose serial number is not legible enough.
- Others not caused by instrument or part itself.

Customer Service Department

Manufacturer:	**Shenzhen Mindray Bio-Medical Electronics Co., Ltd.**
Address:	Mindray Building,Keji 12th Road South,High-tech industrial park,Nanshan,Shenzhen 518057,P.R.China
Website:	www.mindray.com
E-mail Address:	service@mindray.com
Tel:	+86 755 81888998
Fax:	+86 755 26582680

EC Representative

EC-Representative:	**Shanghai International Holding Corp. GmbH (Europe)**
Address:	Eiffestraβe 80, 20537 Hamburg, Germany
Tel:	0049-40-2513175
Fax:	0049-40-255726

Preface

Before using the MW-12A, please read this operator's manual thoroughly for relevant operation instructions.

Intended Audience

This manual is geared for clinical professionals to:

- Operate the MW-12A;
- Maintain and troubleshoot the MW-12A;
- Learn about the MW-12A operation.

WARNING

The MW-12A Microplate Washer is to be operated only by clinical professionals, doctors or laboratory experimenters that are trained by Mindray or Mindray-authorized distributors.

What Can You Find in This Manual

This manual covers principles, basic operating instructions, maintenance and troubleshooting guidelines of the MW-12A. Please operate and troubleshoot the system strictly as instructed by this manual.

Conventions

Safety Symbols

Safety symbols alert you to potentially dangerous conditions and information that requires your attention. These safety symbols, together with related text, apply to specific procedures and appear as needed throughout this manual.

When you see…		Then…
	WARNING	Read the statement following the symbol. The statement is alerting you to an operating hazard that can cause personal injury.
	BIOHAZARD	Read the statement following the symbol. The statement is alerting you to a potentially biohazardous condition.
	CAUTION	Read the statement following the symbol. The statement is alerting you to a possibility of system damage or unreliable results.
	NOTE	Read the statement following the symbol. The statement is alerting you to information that requires your attention.

Labels

The labels attached to the surface of the instrument use symbols to clarify the meaning of the text. If any of the labels peels off, contact Mindray customer service department or your local distributor for replacement. The following chart explains the labels used in this manual.

SN	Serial number
	Manufacture date
	Manufacturer
CE	The device is fully in conformance with the Council Directive Concerning In Vitro Diagnostic Medical Devices 98/79/EC.
EC REP	Authorized Representative in the European Community
	The following definition of the WEEE label applies to EU member states only: The use of this symbol indicates that this product should not be treated as household waste. By ensuring that this product is disposed of correctly, you will help prevent bringing potential negative consequences to the environment and human health. For more detailed information with regard to returning and recycling this product, please consult the distributor from whom you purchased the product.

IVD	In Vitro diagnostic equipment
	BIOHAZARD: risk of potentially biohazardous infection
	WARNING: risk of personal injury or equipment damage
100-240V～	Alternating current (AC) 100～240V
50/60Hz 100VA	Frequency 50/60Hz , Power 100VA
	Protect ground terminal
|	Power ON
○	Power OFF
	Communication interface for PC
Wash1	Wash1 inlet or wash1 bottle
Wash2	Wash2 inlet or wash2 bottle
Distilled Water	Distilled water bottle
Waste	Waste outlet or waste bottle
Buffer	Buffer inlet or buffer bottle
Sensor	Waste sensor port

Graphics

All graphics, including screens, are for illustration purpose only and must not be used for any other purposes.

EC Representative

Name: Shanghai International Holding Corp. GmbH (Europe)

Address: Eiffestraβe 80, 20537 Hamburg Germany

Phone: 0049-40-2513175

Fax: 0049-40-255726

Safety Precautions

Observe theses safety precautions when using the MW-12A Microplate Washer. Ignoring any of the precautions may lead to personal injury or equipment damage.

WARNING

If the instrument is used in a manner not specified by Mindray, the protection provided by the system may be impaired.

Preventing Electric Shock

Please observe the following instructions to prevent electric shock.

WARNING

When the instrument is powered on, users must not remove its enclosure.

Spillage of liquid on the analyzer may cause equipment failure and even electric shock. In case of spillage, switch off the power immediately, remove the spillage and contact Mindray's customer service department or your local distributor.

Preventing Personal Injury Caused by Moving Parts

Please observe the following instructions to prevent personal injury caused by moving parts.

WARNING

Do not touch such moving parts as plate carrier, manifold, etc. when the system is in operation.

Do not put your finger or hand into any open part when the system is in operation.

Preventing Infection

Please observe the following instructions to protect against the biohazardous infection.

BIOHAZARD

Inappropriately handling samples may lead to biohazardous infection. Do not touch the sample or waste with your hands. Wear gloves and lab coat and, if necessary, goggles.

In case your skin contacts the sample or waste, follow standard laboratory safety procedures and consult a doctor.

Treating Waste Liquids

Please observe the following instructions to prevent environmental pollution and personal injury caused by waste.

BIOHAZARD

Some substances in reagent, sample, wash solution and waste are subject to regulations of contamination and disposal. Dispose of them in accordance with local or federal guidelines for biohazardous waste disposal and consult the manufacturer or distributor of the reagents for details.

Treating Waste Parts

Please observe the following instruction to dispose of the used parts to prevent from environmental pollution and personal injury.

BIOHAZARD

Materials of the manifold, plastic bottle, tubing or washer are subject to contamination regulations. Dispose of them in accordance with local or federal guide lines for biohazardous waste disposal.

Preventing Fire or Explosion

Please observe the following instructions to prevent fire and explosion.

WARNING

Ethanol is flammable substance. Please exercise caution while using the ethanol. Do not use flammable substance around this instrument.

Precautions on Use

To use the MW-12A Microplate Washer safely and efficiently, please pay much attention to the following operation notes.

Intended Use

WARNING

This instrument is intended for ELISA test in a clinical laboratory and used in conjunction with Microplate Reader.

Please consult Mindray first if you want to use the system for other purposes.

Operator

WARNING

The MW-12A Microplate Washer is to be operated only by clinical professionals, doctors or laboratory experimenters that are trained by Mindray or Mindray-authorized distributors.

Environment

CAUTION

Please install and operate the system in an environment specified by this manual. Installing and operating the system in other environment may lead to poor washing effect and even equipment damage.

To relocate the system, please contact Mindray customer service department or your local distributor.

Preventing Interference by Electromagnetic Noise

CAUTION

Do not use this device in close proximity to sources of strong electromagnetic radiation (e.g. unshielded intentional RF sources), as these may interfere with the proper operation. The electromagnetic environment should be evaluated prior to operation of the device. This equipment has been designed and tested to CISPR 11 Class A, in a domestic environment it may cause radio interference, in which case, you may need to take measures to mitigate the interference. Do not install devices generating excessive electromagnetic noise around the system. Do not use such devices as mobile phones or radio transmitters in the room housing the system. Do not use other CRT displays around the system. Interference by electromagnetic noise may lead to system failure.

Do not use other medical instruments around the system that may generate electromagnetic noise to interfere with their operations.

NOTE

It is the manufacturer's responsibility to provide equipment electromagnetic compatibility information to the customer or user.

It is the user's responsibility to ensure that a compatible electromagnetic environment for the equipment can be maintained in order that the device will perform as intended.

Communication Port

WARNING

This instrument has a serial port that is used only for upgrading the system software. Users must not operate the instrument via this serial port; otherwise equipment damage may be caused.

Contents

Intellectual Property Statement i
Responsibility on the Manufacturer Party ii
Warranty ii
Exemptions iii

Preface 1

Intended Audience 1
What Can You Find in This Manual 1
Conventions 2
Safety Precautions 4
Precautions on Use 6

1 The Basics 1-1

1.1 System Description 1-1
1.2 Appearance 1-1
1.3 Control Mode 1-2
1.4 Operation Tips 1-2
1.5 Storage 1-3

2 Installation 2-1

2.1 Unpacking 2-1
2.2 Installation Requirements 2-1
2.2.1 Space Requirements 2-2
2.2.2 Power and Environmental Requirements 2-2
2.3 Installing the Washer 2-2
2.4 Installing the Manifold 2-3
2.5 Connecting the Bottles 2-4

2.6 Installing the Power Cord 2-5

3 Basic Operations 3-1

3.1 Overview 3-1
3.1.1 Keypad 3-1
3.1.2 Main Screen 3-2
3.2 Needle Positions 3-2
3.2.1 Manifold Selection 3-2
3.2.2 Position Adjustment 3-3
3.3 Parameters 3-10
3.3.1 Parameter Configuration Screen 3-10
3.3.2 Setting up Programs 3-11
3.4 Running a Program 3-15
3.5 Maintenance 3-18
3.6 Waste Full 3-19
3.7 Shut down 3-20

4 Maintenance 4-1

4.1 Tools Required for Maintenance 4-1
4.2 Daily Maintenance 4-1
4.3 Weekly Maintenance 4-2
4.3.1 Maintaining the Solenoid Valve Tubing 4-2
4.3.2 Maintaining the manifold connector 4-3
4.4 Monthly Maintenance 4-3
4.5 As-Needed Maintenance 4-3
4.5.1 Cleaning Fluidic System 4-4
4.5.2 Cleaning Mechanical Parts 4-4

5 Troubleshooting 5-1

5.1 Manifold Failure 5-1
5.2 Movement Error 5-2
5.3 Dispense Needle Error 5-3
5.4 Residue Too Much 5-3
5.5 Wash Solution Overflow 5-4
5.6 Collision of Manifold and Microplate 5-4

6 Appendix 6-1

Appendix A Specifications 6-2
Appendix B Supplies 6-3
Appendix C Index 6-4

1 The Basics

1.1 System Description

Components: This instrument is supplied with the washer, wash bottles, waste bottle, distilled water bottle and buffer bottle.

Principles: This instrument consists of hardware, software, mechanics and fluidic part. Controlled by the software program, the instrument can automatically dispense wash solution into microplate wells and discharge the waste fluid to waste bottle. The manifold and plate carrier can move vertically and horizontally to aspirate and dispense liquid.

1.2 Appearance

The MW-12A Microplate Washer applies to 96-/48-well microplates. It is supplied with a 12-/8-channel manifold, wash bottles, waste bottle, and buffer bottle, and supports two types of wash solution.

1.3 Control Mode

The MW-12A Microplate Washer can be operated via the keypad on the front panel.

1.4 Operation Tips

The power indicator is located on the lower right corner of the LCD. It lights:

- ON when the system is powered on.
- OFF when the system can not work normally.

When powered on, the washer performs an initialization, which includes mechanical reset, waste check, manifold position check, etc, and then displays the main screen.

NOTE
The initialization will take about 20 seconds.

Fore detailed operations of the instrument, refer to **3 Basic Operations**.

You can follow this procedure to operate the instrument:

1 Fill each wash bottle with appropriate wash solution, then connect the bottles to the washer.

2 Fill the distilled water bottle with distilled water or deionized water for use in washing.

3 Connect the buffer bottle and empty waste bottle to the washer.

4 Power on the washer. When startup initialization is finished, configure the wash positions, parameters and then run the wash programs.

5 When the wash procedure is finished, connect the distilled water bottle to Wash2 port on rear panel of the washer, then launch a rinse maintenance procedure to clean the tubing for no less than 15s.

6 Power off the washer.

7 Empty and clean the waste bottle in accordance with your laboratory safety regulations.

CAUTION

When the instrument is not used, lay down the aerosol cover to prevent from dust and foreign matters.

1.5 Storage

The washer and packaging materials should be stored in an environment that meets the following requirements:

Storage temperature: 0°C-40°C

Relative humidity: 15%-85%

Free of erosive gas and well ventilated

CAUTION

The washer should be stored without any residual fluid in it. Perform the following steps before storing the washer:

1) Before turning off the washer, run a rinse procedure for less than 20s with distilled water or deionized water.
2) When rinsing is finished, disconnect the two wash bottles from the washer, and place a used microplate on the plate carrier.
3) On the parameter configuration screen, select Wash1 and run at least one wash program, then launch a rinse procedure for over 15 seconds.
4) Turn off the washer.

2 Installation

WARNING:

The MW-12A should be installed only by Mindray or Mindray-authorized technicians. You should prepare a place meeting the requirements specified in ***2.2 Installation Requirements***

2.1 Unpacking

When you receive the instrument, carefully inspect the package. If you see any signs of mishandling or damage, file a claim immediately with Mindray Customer Service Department or your local distributor.

After opening the package, check the delivered goods against the packing list as well as the appearance of the instrument. If you find anything missing or damaged, alert Mindray Customer Service Department or your local distributor immediately.

2.2 Installation Requirements

CAUTION:

Make sure the system is installed in a place meeting the requirements specified in this manual. Otherwise, it will not perform as promised.

2.2.1 Space Requirements

- The instrument is for indoor use only.
- The operating platform should be level (gradient less than ∠1:200), stable, dry and tidy. The bearing platform should be able to bear 10kg weight.
- Enough space should be ensured for connection of lines and bottles. You're recommended to set the instrument on a platform that has a length of no less than 60cm and width of no less than 70cm.

2.2.2 Power and Environmental Requirements

- Ambient temperature: 5°C-35°C
- Relative humidity: 15%-85%
- Power supply: 100-240V~±10%,50/60Hz
- Power consumption: 100VA
- Atmospheric pressure: 70 kPa-106kPa
- The instrument should be far from strong magnetic fields.
- The instrument should be shielded from direct sunlight.
- The instrument should be properly grounded.
- The installation site should be well ventilated.

2.3 Installing the Washer

Follow this procedure to install the washer:

1. After opening the package, take out the fitting pack and washer. Open the fitting pack and take out the wash bottles, tubing, etc.
2. Set the washer on the operating platform and keep it at least 15cm away from the wall. Remove the packaging material from the washer.
3. Remove the protective materials from the manifold support, plate carrier and tubing.
4. Install the manifold as per section **2.4 Installing the Manifold**.
5. Install the bottles and waste sensor as per section **2.5 Connecting the Bottles** and **2.6 Installing the Power Cord**.

2.4 Installing the Manifold

1 Open the aerosol cover and place the manifold on the manifold support horizontally, allowing the two retaining screws on the manifold to lie in the support grooves.

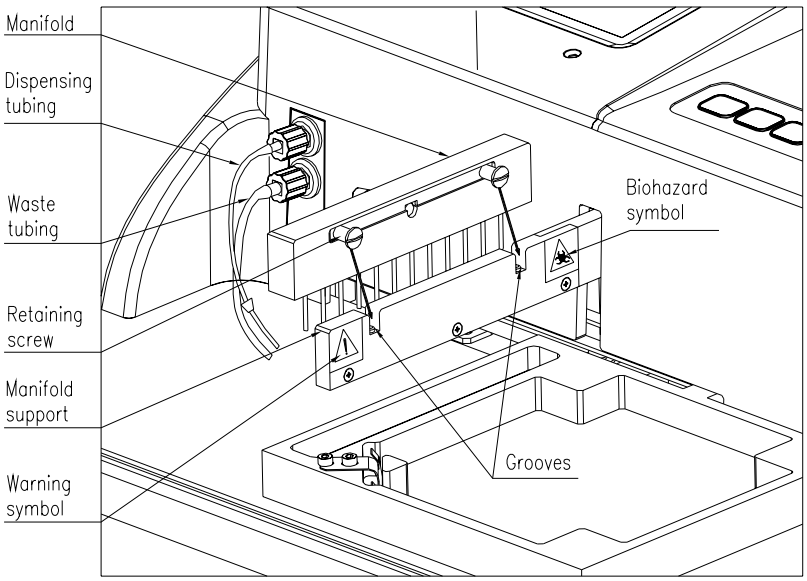

2 One end of the dispensing tubing (thinner) and waste tubing (thicker) has been connected to corresponding black and red ports on the washer. Connect the other end of the dispensing tubing and waste tubing respectively to the smaller and bigger connectors on the manifold.

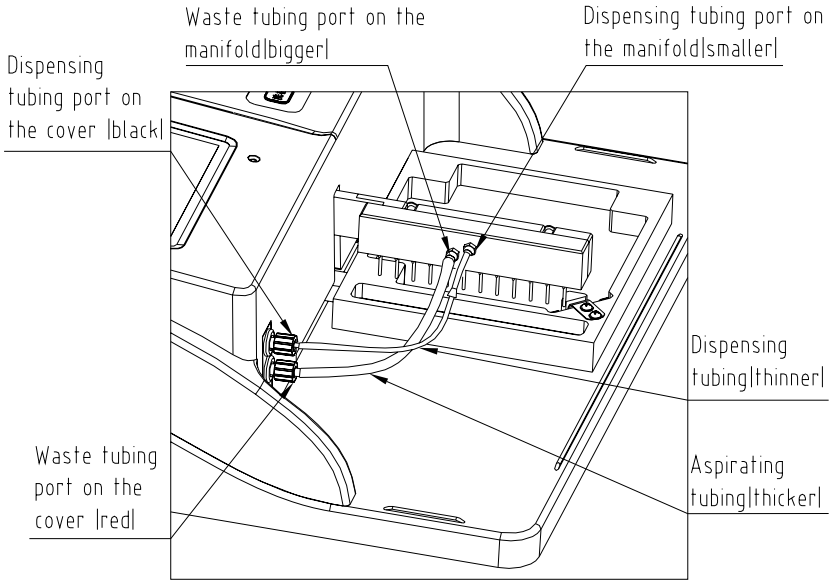

NOTE

Be sure to insert the tubing into the connector until the tubing cannot proceed any more.

2.5 Connecting the Bottles

The MW-12A Microplate Washer is provided with the wash1 bottle, wash2 bottle, buffer bottle, waste bottle and distilled water bottle. The distilled water bottle can be leave aside at the beginning and connected to the washer only when wash2 bottle is empty during rinse process. The following figure shows all connectors on the rear panel of the washer.

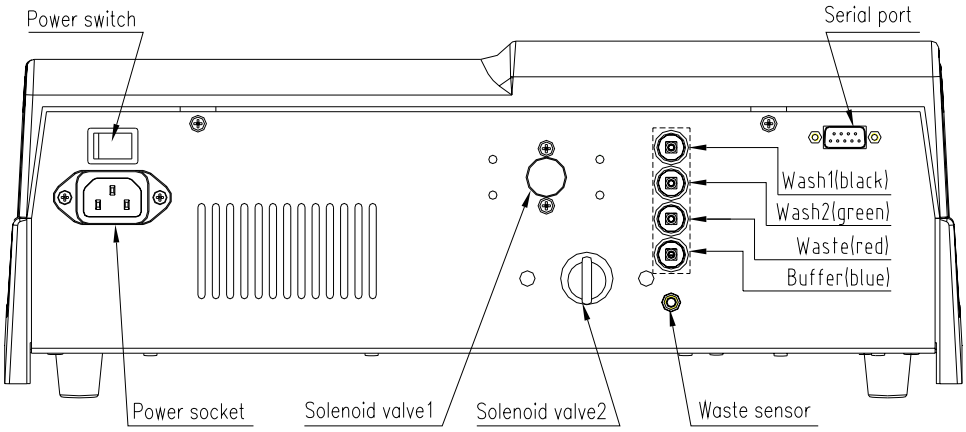

1 Connect one end of wash1 tubing (black) to Wash1 connector on the washer and the other end to the black fitting on wash1 bottle.

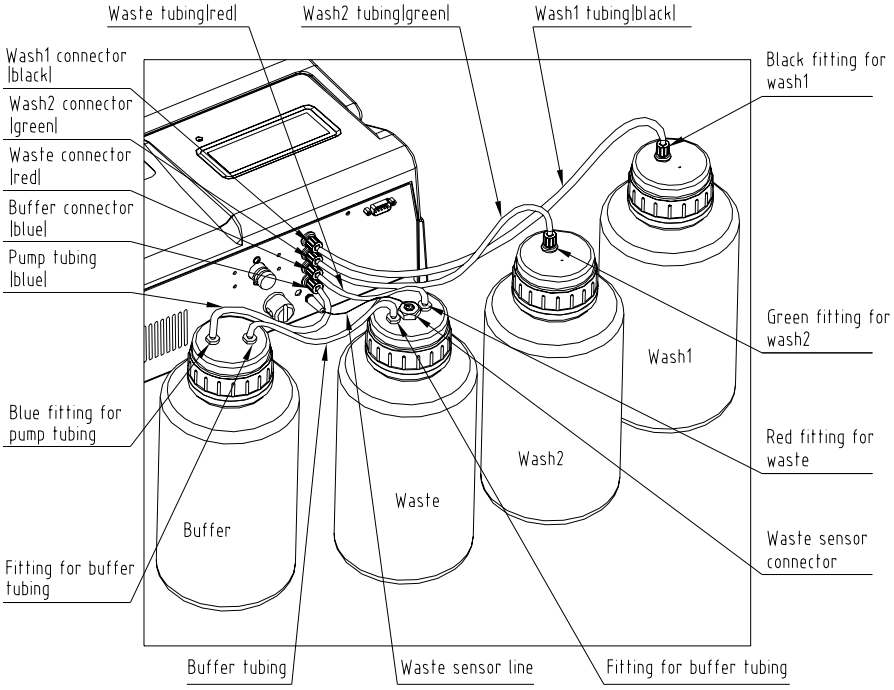

2 Connect one end of wash2 tubing (green) to Wash2 connector on the washer and the other end to the green fitting on wash2 bottle.

3 Connect one end of waste tubing (red) to Waste connector on the washer and the other end to the red fitting on waste bottle.

4 Connect one end of pump tubing (blue) to Buffer connector on the washer and the other end to the blue fitting on buffer bottle.

5 Use the buffer tubing to connect the waste bottle and buffer bottle.

6 The waste sensor is fixed on the waste bottle. Connect the waste sensor line to Waste Sensor connector on the rear panel of the washer.

NOTE

Be sure to insert the tubing into the connector until the tubing cannot proceed any more.

Be sure to tighten the caps of waste bottle and buffer bottles during washing process. Otherwise good aspirating may not be achieved.

2.6 Installing the Power Cord

Connect one end of the power cord to the power socket on rear panel of the washer and other end to the power supply. Switch on the power. The instrument is started and starts initializing. The initialization process includes mechanical reset, waste detection and manifold check, and lasts for about 20s.

WARNING

The instrument uses a three-wire power cord and should be grounded properly; otherwise electric shock or equipment damage may be caused.

A fuse (250V@T3.15A, slow-blow) is provided on the instrument and must not be replaced by user.

Ensure that the power supply complies with the power requirements specified in this manual and an appropriate fuse is installed.

CAUTION

Ensure that the instrument is switched off before connecting the power cord.

3 Basic Operations

3.1 Overview

The MW-12A Microplate Washer can be operated via the keypad on the front panel.

3.1.1 Keypad

The keypad of the instrument is shown in the figure below.

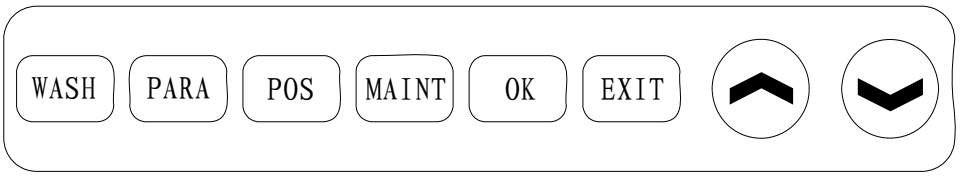

WASH	Press to start a wash program.
PARA	Press to set up wash programs.
POS	Press to adjust the dispensing/aspiration positions of the needles.
MAINT	Press to rinse the tubing.
OK	Press to confirm your settings and proceed to the next parameter.
EXIT	Press to exit and return to the previous menu with your settings saved.
︿ key	Press to increase the value of selected parameter or toggle between options.

❯ key	Press to decrease the value of selected parameter or toggle between options.

3.1.2 Main Screen

Switch on the power supply. The system performs an initialization and then displays the main screen as shown below.

Parameter	Position
Wash	Maintenance

3.2 Needle Positions

Press the ***POS*** key on the front panel of the washer. The needle position setup screen is displayed as follows.

12 Channel	
Cent Pos	Left Pos
Right Pos	Disp Pos
Bot Auto Ht	Bot Manu Ht

On the needle position setup screen:

- ***X Channel***: It indicates manifold type and includes 12- and 8- channel.
- XX(value): It indicates the position parameter(mm) you're configuring and is displayed on the upper-right corner of the screen.
- ***Cent Pos***: Select to adjust the position of the aspirate needle to the center of the well. This central position is the default aspirate position for U-/V-bottom plates.
- ***Left Pos***: Select to adjust the first aspirate position for crosswise aspiration.
- ***Right Pos***: Select to adjust the second aspirate position for crosswise aspiration or to adjust the aspirate position for standard aspiration.
- ***Disp Pos***: adjust the dispensing position of the dispense needle or the overflow height.
- ***Bot Auto Ht***: detect the well bottom and determines the aspiration height.
- ***Bot Manu Ht***: allow the user to define the bottom aspiration height.

3.2.1 Manifold Selection

An appropriate manifold should be selected according to the microplate and its placement on the carrier. When changing the manifold, you must reset the manifold type and other parameters on the needle position setup screen.

NOTE

When using 48-well plates, you must select 12-channel manifold and fix it with the positioning plate provided with the instrument.

When changing the plate type, you must reset the parameters on the needle position setup screen.

1 Press the ***POS*** key on the front panel of the washer. The needle position setup screen shows and the manifold type is highlighted by default

12 Channel	
Cent Pos	Left Pos
Right Pos	Disp Pos
Bot Auto Ht	Bot manu Ht

2 Select ***12-Channel*** or ***8-Channel*** by pressing ︿ or ﹀.

3 Press ***OK*** to save your selection and proceed to the next parameter (Cent ***Pos***).

4 Otherwise, press ***EXIT*** to save your settings and return to the main screen.

Parameter	Position
Wash	Maintenance

3.2.2 Position Adjustment

NOTE

The washer has been aligned with standard microplate before leaving the factory. However, you need to adjust the needle position according to your plate type, so that the washer can operate more effectively.

Different microplates may be different in height. Before using the plates, be sure to set them level and make sure no microwell is protruded.

Aspiration height refers to the depth that the aspirate needle moves down to the well during washing. During wash cycles, the aspirate needle aspirates liquid from the well and sucks it into the waste bottle. You must set appropriate left and right positions based on different plate types.

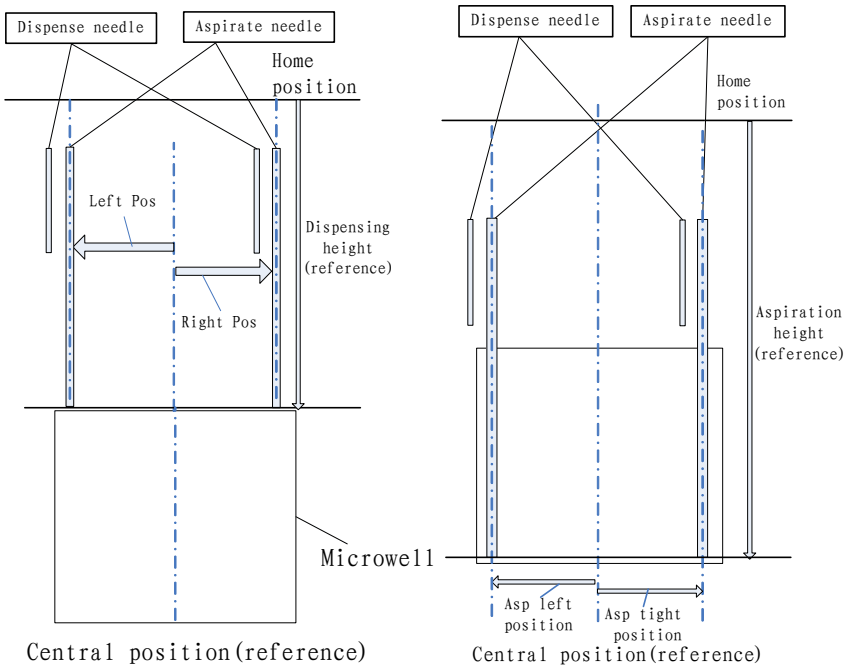

1 After selecting a manifold, press ***OK***. ***Cent Pos*** is highlighted. The needles move to the top of the first row of the plate.

12 Channel	XX
Cent Pos	Left Pos
Right Pos	Disp Pos
Bot Auto Ht	Bot Manu Ht

2 Move the plate carrier rightwards or leftwards by selecting ︿ or ﹀ until the needles lie in the center of the wells. (Select ︿ to move right and ﹀ to move left.) The position value is displayed on the upper right corner of the screen.

3 Press ***OK*** to save your settings and highlight ***Left Pos***. The needles move to the top left of the first row of the plate.

12 Channel	XX
Cent Pos	Left Pos
Right Pos	Disp Pos
Bot Auto Ht	Bot Manu Ht

4 Move the plate carrier rightwards or leftwards by selecting ︿ or ﹀ until the aspirate needles reach the aspiration left position. The position value is displayed on the upper right corner of the screen. (Select ︿ to move right and ﹀ to move left.)

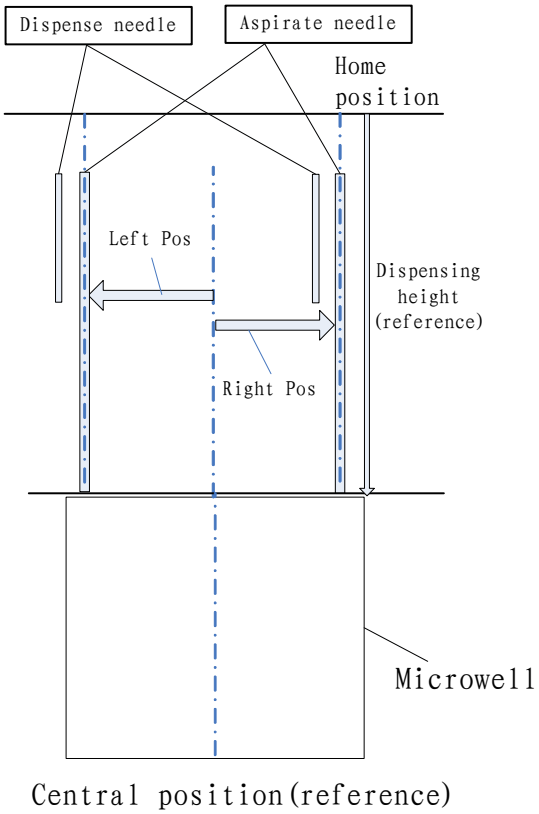

5 Press ***OK*** to save your settings and highlight ***Right Pos***. The needles move to the top right of the first row of the plate.

12 Channel	XX
Cent Pos	Left Pos
Right Pos	Disp Pos
Bot Auto Ht	Bot Manu Ht

6 Move the plate carrier rightwards or leftwards by selecting ︿ or ﹀ until the aspirate needles reach the aspiration right position. The position value is displayed on the upper right corner of the screen. (Select ︿ to move right and ﹀ to move left.)

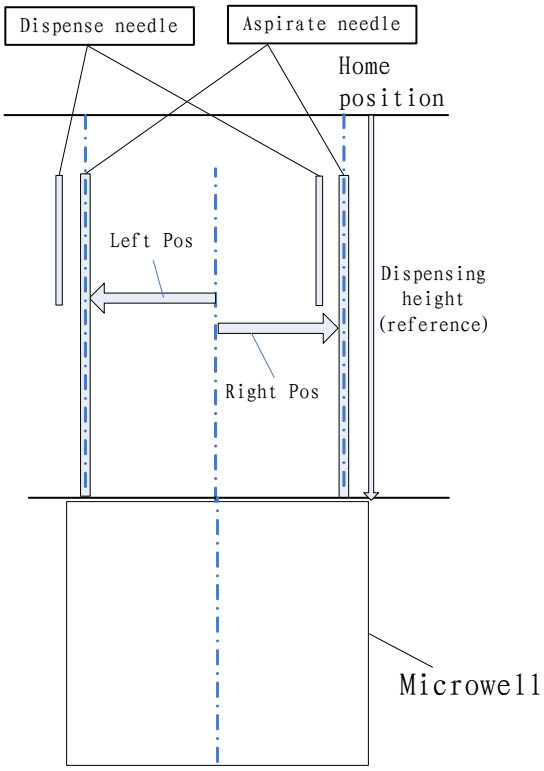

Central position(reference)

NOTE

The left and right positions, relating to crosswise washing, must not go beyond the microwell to avoid damaging the needles. Also the two positions must not be too close to the well center to achieve best washing effects. It is recommended that the two positions set to about 0.2-0.5mm away respectively from the left and right walls of the well.

7 Press ***OK*** to save your settings and highlight ***Disp Pos***. The needles move to the center of the first row of the plate.

12 Channel	XX
Cent Pos	Left Pos
Right Pos	Disp Pos
Bot Auto Ht	Bot Manu Ht

NOTE

The dispensing position must not be set too high, so that the aspirate needles are far from the well and overflow is caused. Also the dispensing position must not be set too low, so that the aspirate needles move deep into the well and the well opening cannot be washed thoroughly. You are recommended to adjust the aspirate needles to be about ±0.5mm away from the well.

8 Move the manifold upwards or downwards by selecting ︿ or ﹀ until the dispense needles reach the dispensing position. The position value is displayed on the upper right corner of the screen.

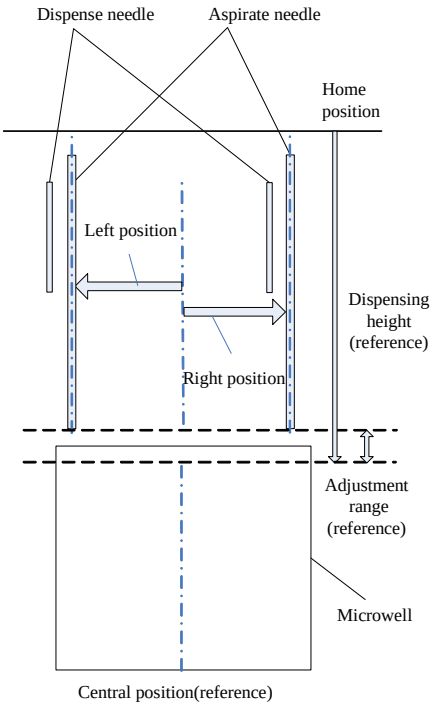

9 Press ***OK*** to save your settings and highlight ***Bot Auto Ht***. The needles move to the bottom of the first row of the plate.

12 Channel	XX
Cent Pos	Left Pos
Right Pos	Disp Pos
Bot Auto Ht	Bot Manu Ht

10 The washer detects the well bottom automatically and determines the aspiration height. The value is displayed on the upper right corner of the screen.

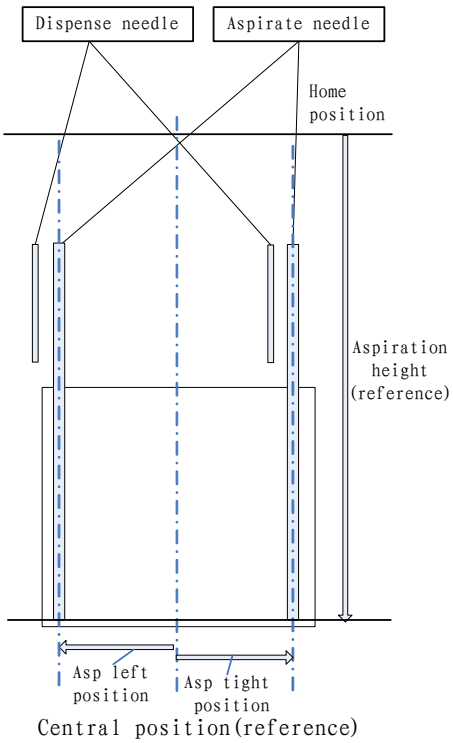

NOTE

If warning appears during bottom auto detection, please click ***OK*** to clear it. But if detection failed, it might be that the connection of the manifold is contaminated, leading to poor contact. Please refer to 4.3.2 for details on maintaining the connection of the manifold. Click ***EXIT*** to return, or click ***OK*** to start the ***Bot Manu Ht***.

11 To manually adjust the bottom aspiration height, press ***OK*** to highlight ***Bot Manu Ht***. The needles move to the inside of the first row of the plate.

12 Channel	XX
Cent Pos	Left Pos
Right Pos	Disp Pos
Bot Auto Ht	Bot Manu Ht

12 Move the manifold upwards or downwards by selecting ︿ or ﹀ until the aspirate needles reach the appropriate aspiration height. The position value is displayed on the upper right corner of the screen. (Select ︿ to move upward and ﹀ to move downward.)

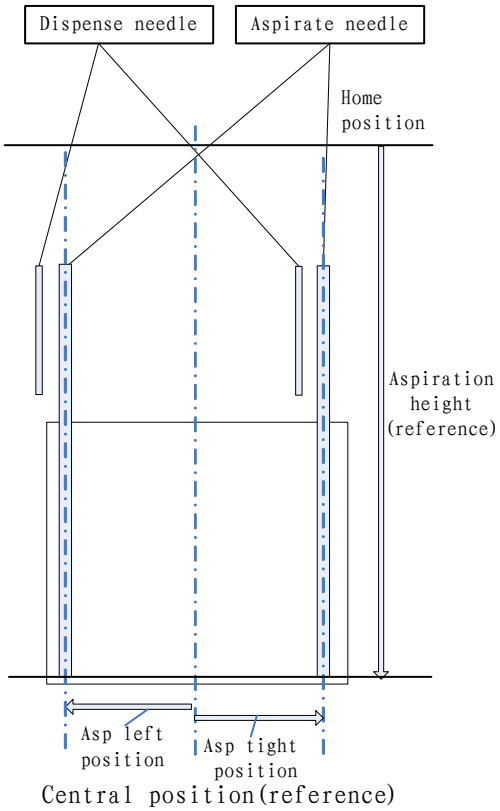

NOTE

You are recommended to use ***Bot Auto Ht***, by which you can get precise aspiration height. If you want to set the aspirate height manually, you should adjust the aspirate needles to be at most 0.4mm away from the microwell bottom.

13 If you want to continue to set other parameters, press ***OK***.

14 Otherwise, press ***EXIT*** to save your settings and return to the main screen.

Parameter	Position
Wash	Maintenance

CAUTION

You must adjust all position parameters strictly as instructed above; otherwise the instrument performance may be compromised.

NOTE

After any adjustment, you can press ***EXIT*** to return to the main screen or press other keys to start corresponding operations.

3.3 Parameters

3.3.1 Parameter Configuration Screen

On the parameter configuration screen, you can adjust and set the following parameters, which include program number, well bottom shape, wash solution, wash mode, bottom wash, crosswise aspiration, dispensing volume, soak time, shaking time, aspiration time and cycle times.

Press the ***PARA*** key on the front panel of the washer. The parameter configuration screen is displayed as follows.

ProgXX	Flat	WashX
Plate	Bottom	Crosw Asp
VolXXX	SoakXXX	ShakeXX
AspXXX	CycXX	

A complete wash program includes:

- ***Prog xx***: Wash program number.
- ***Flat***: Well bottom shape. You can toggle between Flat and UV.
- ***Wash X***: Type of wash solution. You can toggle between Wash1 and Wash2.
- ***Plate***: Wash mode. You can toggle between Plate and Strip.
- ***Bottom***: You can activate or deactivate the bottom wash function.
- ***Crosw Asp***: You can activate or deactivate the crosswise aspiration function.
- ***Vol XXX***: Dispensing volume (μl). Adjustable from 50-3000μl in 50μl increment.
- ***Soak XXX***: Soak time(s). Adjustable from 0-300s in 1s increment.
- ***Shake XX***: Set the shaking time(s), which is adjustable from 0-300s with increment of 1s.
- ***Asp XXX***: Aspiration time(s). Adjustable from 0.1-10s in 0.1s increment.
- ***Cyc XX***: Cycle times of washing. Adjustable from 0-9 in 1 increment.
- : Manifold status check (selectable). You can select (no check) or (check)

NOTE

Up to 100 wash programs (No.00-No.99) can be stored in the washer.

3.3.2 Setting up Programs

Each program is indicated by a unique number within 00-99 and convenient for calling by user.

To set up a program:

1 Press the ***PARA*** key on the front panel of the washer. The program setup screen is displayed. ***Prog xx*** is highlighted by default.

ProgXX	Flat	WashX
Plate	Bottom	Crosw Asp
VolXXX	SoakXXX	ShakeXX
AspXXX	CycXX	

2 Use ︿ and ﹀ to define a new program number. Press ︿ to increase or ﹀ to decrease.

> **NOTE**
> If the selected program number is a new number, the default parameters are displayed on the screen.

3 Press ***OK*** to highlight the well bottom shape.

ProgXX	Flat	WashX
Plate	Bottom	Crosw Asp
VolXXX	SoakXXX	ShakeXX
AspXXX	CycXX	

4 Select ***Flat*** or ***UV*** by pressing ︿ or ﹀.

5 Press ***OK*** to highlight the wash solution.

ProgXX	Flat	WashX
Plate	Bottom	Crosw Asp
VolXXX	SoakXXX	ShakeXX
AspXXX	CycXX	

6 Select ***Wash1*** or ***Wash2*** by pressing ︿ or ﹀.

> **NOTE**
> You should connect ***Wash1*** and ***Wash2*** to the corresponding connectors on the rear panel of the washer.

7 Press ***OK*** to highlight the ***wash mode***.

ProgXX	Flat	WashX
Plate	Bottom	Crosw Asp
VolXXX	SoakXXX	ShakeXX
AspXXX	CycXX	

8 Select ***Plate*** or ***Strip*** by pressing ︿ or ﹀.

> **NOTE**
> You can only select ***Strip*** when using ***48-well*** microplates.

9 Press ***OK*** to highlight the bottom wash.

ProgXX	Flat	WashX
Plate	Bottom	Crosw Asp
VolXXX	SoakXXX	ShakeXX
AspXXX	CycXX	

10 Select ***Bottom*** or ***No Bot*** by pressing ︿ or ﹀.

> **NOTE**
> The dispensing volume for bottom wash cannot be defined and is about 150µl.

11 Press ***OK*** to highlight the aspiration mode.

ProgXX	Flat	WashX
Plate	Bottom	Crosw Asp
VolXXX	SoakXXX	ShakeXX
AspXXX	CycXX	

12 Select ***Crosw Asp*** or ***Std Asp*** by pressing ︿ or ﹀.

> **NOTE**
> You must select ***Std Asp*** for ***UV*** bottom plates.

13 Press ***OK*** to highlight the ***dispensing volume***.

ProgXX	Flat	WashX
Plate	Bottom	Crosw Asp
VolXXX	SoakXXX	ShakeXX
AspXXX	CycXX	

14 Set the dispensing volume (μl) with increment of 50. Press ︿ to increase or ﹀ to decrease.

NOTE

The dispensing volume range is 50-3000μl with increment of 50μl. The default dispensing volume is 300μl and the capacity of each well is about 350μl.

When the dispensed volume is greater than 300μl, the aspirate needles must not be too far away from the well; otherwise overflow may be caused. You are recommended to adjust the aspirate needles to be at most ± 0.5mm away from the well.

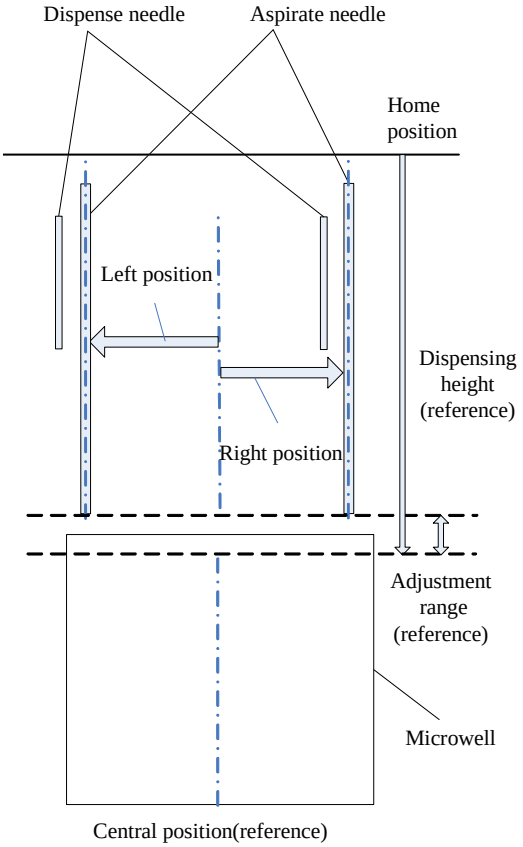

15 Press ***OK*** to highlight the ***soak time***.

ProgXX	Flat	WashX
Plate	Bottom	Crosw Asp
VolXXX	SoakXXX	ShakeXX
AspXXX	CycXX	

16 Increase or decrease the ***soak time***(s) by pressing ︿ or ﹀. 0 means no soaking.

17 Press ***OK*** to highlight the ***shaking time***.

ProgXX	Flat	WashX
Plate	Bottom	Crosw Asp
VolXXX	SoakXXX	ShakeXX
AspXXX	CycXX	

18 Increase or decrease the ***shaking time***(s) by pressing ︿ or ﹀. 0 means no shaking.

19 Press ***OK*** to highlight the ***aspiration time***.

ProgXX	Flat	WashX
Plate	Bottom	Crosw Asp
VolXXX	SoakXXX	ShakeXX
AspXXX	CycXX	

20 Increase or decrease the ***aspiration time***(s) by pressing ︿ or ﹀.

NOTE

The ***aspiration time*** is crucial to washing effects and 1.5s by default. You can adjust the aspiration time as needed, and it should be no less than 1s.

21 Press ***OK*** to highlight the ***cycle times***.

ProgXX	Flat	WashX
Plate	Bottom	Crosw Asp
VolXXX	SoakXXX	ShakeXX
AspXXX	CycXX	

22 Increase or decrease the ***cycle times*** by pressing ︿ or ﹀.

23 Click ***OK*** to move the cursor on the manifold status check screen.

ProgXX	Flat	WashX
Plate	Bottom	Crosw Asp
VolXXX	SoakXXX	ShakeXX
AspXXX	CycXX	

24 Use ︿ or ﹀ to select whether status check is enabled. (○ ○: check; ○—○: no check). In general, no check mode is selected.

NOTE:

If things like removing manifold during wash do not happen, in the meantime standard micro plate is used with no conspicuous dimension difference between the manifold and the micro plate, the default mode—No check can be used. If check mode is selected, when the connection of the manifold is contaminated, the following information will be displayed during washing:

```
Error!
Please check the manifold !
Press OK to continue or
EXIT to cancel !
```

It is necessary to check whether the manifold is in the right position or the connection position of the manifold. Please refer to 4.3.2 for details of the method.

25 If you want to set other programs or parameters, press OK.

26 Otherwise, press ***EXIT*** to save your settings and return to the main screen.

```
Parameter  Position
Wash       Maintenance
```

NOTE

After any configuration, you can press ***EXIT*** to return to the main screen or press other keys to start corresponding operations with your settings saved automatically.

3.4 Running a Program

The program selection screen enables you to select a ***program*** and ***rows***, and to activate/deactivate the ***pre-rinse*** function.

CAUTION

Prior to running a program, check if there is enough wash solution in the wash bottles and if the waste bottle is emptied.

You must run a ***pre-rinse*** before running the first wash program when,

- The instrument is started up; or
- The wash solution is replaced.

NOTE

Different microplates may be different in height. Before using the plates, be sure to set them level and make sure no microwell is protruded.

The wash screen displays the parameters of wash program you have set. Please check the parameters before starting the program and change them if needed.

To run a program:

1 Press the ***WASH*** key on the front panel of the washer. The wash screen is displayed as follows. The ***program number*** is highlighted by default.

```
XX   Flat    Wash X     Plate
Bottom       Crosw Asp  Vol XXX
Soak XXX     Shake XXX  Asp XX
Cyc X        Pre-rinse  RowsX
```

2 Increase or decrease the ***program number*** by pressing ︿ or ﹀.

NOTE

The default program is the one that you've just complied or used recently.

3 Press ***OK*** to highlight the ***pre-rinse*** item.

```
XX   Flat    Wash X     Plate
Bottom       Crosw Asp  Vol XXX
Soak XXX     Shake XXX  Asp XX
Cyc X        Pre-rinse  RowsX
```

4 Select ***Pre-rinse*** or ***No Pre-R*** by pressing ︿ or ﹀.

WARNING

You must run a ***pre-rinse*** before running the first wash program when,

- The instrument is started up; or
- The wash solution is replaced.

5 Press ***OK*** to highlight the ***rows number***.

```
XX   Flat    Wash X     Plate
Bottom       Crosw Asp  Vol XXX
Soak XXX     Shake XXX  Asp XX
Cyc X        Pre-rinse  RowsX
```

6 Increase or decrease the ***rows number*** by pressing ︿ or ﹀.

NOTE

The default ***rows number*** is 8 for ***12-channel*** manifold. If ***8-channel*** manifold is selected, the default rows number will be 1***2***. You can set the rows number as needed.

7 If you want to reselect a program or change the parameters, press ***OK***.

8 Otherwise, press ***WASH*** to run the wash program.

NOTE

If the check mode is selected, prior to and during washing the plate, the system will check the position of the manifold. If a message "Please check the manifold! Press OK to continue or EXIT to cancel!" pops up, it might be that the manifold is not correctly placed or the connector of the manifold is dirty. Follow instruction of 4.2.2 to clean it. Press ***Ok*** to start the washing, Press ***EXIT*** to return to the main screen. In general, No check is selected.

During the washing process, press ***EXIT*** to pause. To resume the washing, press ***OK*** or press ***EXIT*** to return to the main screen.

During washing process, the screen shows the current operation status, cycle times and rows number. The operation status includes Starting air pump Pre-rinsing, Aspirating, Dispensing, Soaking, Shaking, etc. Cyc X/X indicates the current cycle and the total cycles. Rows X/X indicates the current row and the total rows to be washed.

```
XXXXXXXXX
Cyc X/X     Row X/X
Press EXIT to pause !
```

CAUTION

If the plate is not loaded properly, do not run wash programs. Otherwise liquid may be spilled into the instrument and even lead to electric shock or equipment damage.

Running a program when the wash bottles are lack of wash solution may compromise the washer's reliability and cause washing failure.

NOTE

The washer will display a prompt message and pause the operation to remind you to take actions when the waste in the waste bottle exceeds the limit line.

When the ***EXIT*** key is pressed during washing, the pause screen is displayed as follows, indicating the washing status and asking you to taking an action.

```
Pausing
Cyc X/X     Row X/X
Press OK to continue or
EXIT to cancel !
```

3.5 Maintenance

The fluidic tubing should be rinsed with distilled water or deionized water periodically in order to prevent crystal deposits, thus eliminating equipment failure.

NOTE

We recommend that you perform a daily rinse prior to turning off the washer or a periodical rinse procedure.

To rinse the fluidic tubing:

1 Press the ***MAINT*** key on the front panel. The rinse setup screen is displayed as follows.

```
Rinse time XX
Ensure Wash 2 is distilled
water! Press MAINT to Rinse
or EXIT to cancel !
```

2 Increase or decrease the rinse time(s) by pressing ︿ or ﹀.

NOTE

You should use ***Wash2*** to rinse the fluidic tubing. Check if the ***Wash2*** bottle is filled with distilled water (or deionized water). If not, you'll not obtain satisfactory rinse effects. The rinse time can be adjusted from 1s to 300s. The default is 10s. You are recommended to set the rinse time to no less than 7s.

During rinsing process, the screen displays as follow:

```
In rinsing
Press EXIT to pause !
```

Press the ***EXIT*** key during rinsing. The following screen is displayed.

Pausing
Press OK to continue or
EXIT to cancel !

Press ***OK*** to continue rinsing, or press ***EXIT*** to abort

3.6 Waste Full

When the waste bottle is full, an alarm will be triggered and the screen displays as follows:

Warning !
Waste full ! Press OK to
continue or EXIT to cancel !

You can remove the error using the following methods:

1 If the error occurs when wash solution is not dispensed, you should pause or cancel the wash program, then empty the waste bottle and restart the wash program.

2 If the error occurs during washing process and the sample can be soaked for a long time, you can pause the operation and empty the waste bottle and then continue with the wash program.

3 If the error occurs during washing process and the sample must not be soaked for a long time, you can continue the washing in case: 1) the waste in buffer bottle is less than 600ml; 2) dispensing volume is no more than 350μl/well, 3) cycle times are less than 6. After this wash program, you should empty the waste bottle and buffer bottle completely.

4 If the above-mentioned 3 conditions do not apply, you must first empty the waste bottle and then continue the wash program.

BIOHAZARD

Dispose of the reagent, sample, wash solution and waste in accordance with local or federal guide lines for biohazardous waste disposal and consult the manufacturer or distributor of the reagents for details. While disposing of the waste, wear gloves and lab coat and, if necessary, goggles.

In case your skin contacts the waste, follow standard laboratory safety procedures and consult a doctor.

CAUTION

Before running a wash program, be sure to check the waste bottle for overflow and empty it if necessary; otherwise the instrument performance may be compromised.

.

3.7 Shut down

Switch off the power supply to shut down the system when all operations have been completed.

4 Maintenance

4.1 Tools Required for Maintenance

The following tools will be used for maintenance of the system.

- Hex wrenches (M1.5, M3 and M4)
- Cross-headed screwdrivers (large, medium and small)
- Needle tube
- Tweezers
- Clean gauze
- scissors

To ensure the washer works normally, you must follow this procedure to maintain it properly.

BIOHAZARD

When performing maintenance, do not touch any wash solution or waste fluid with your hands. Wear gloves and lab coat and, if necessary, goggles.

In case your skin contacts the waste fluid, follow standard laboratory safety procedure and consult a doctor.

4.2 Daily Maintenance

- Remove the residual fluid on the washer surfaces.

- Before turning off the washer, launch a rinse procedure with distilled water or deionized water to prevent crystal deposits.
- Empty the waste bottle.

CAUTION

The wash solution contains phosphate and may result in crystal deposits, thus clogging the tubing or connectors inside the washer. Don't leave wash solution in the tubing for a long period of time. A rinse procedure is required everyday when the wash program is finished. If the tubing and needles are plugged by crystal deposits, clog them with the stainless needle provided with the washer. If the crystal deposits cannot be removed due to no cleaning for a long time, replace the manifold.

4.3 Weekly Maintenance

4.3.1 Maintaining the Solenoid Valve Tubing

The tubing clamped by the solenoid valves on the rear panel is easy to be deformed. Pull and restore the tubing frequently to prevent deformation, or even clogging and extend its service life.

Follow this procedure to maintain the tubing clamped by the solenoid valves:

1 As for tubing clamped by Solenoid Valve 1, first pull the outer tubing a little, then keep pressing the black end of Valve 1 and pull the inner tubing.

2 As for tubing clamped by Solenoid Valve 2 first perform a rinse maintenance for about 20s, then pull the tubing quickly when the dispense needle is dispensing liquid.

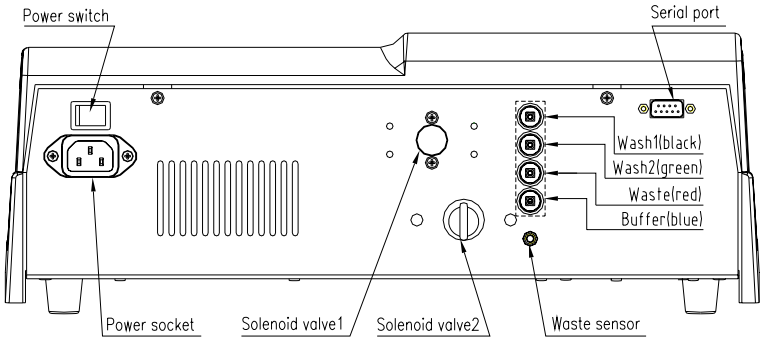

NOTE

The tubing used together with Solenoid Valve 1, and Solenoid Valve 2, has a service life of about 18 months if maintained as required by Mindray. Check the tubing frequently for damage and replace it if any.

4.3.2 Maintaining the manifold connector

Use cotton balls dipped with ethanol to wipe the manifold screws and metal plates in the grooves of the manifold support, to prevent poor contact resulted from dust accumulation.

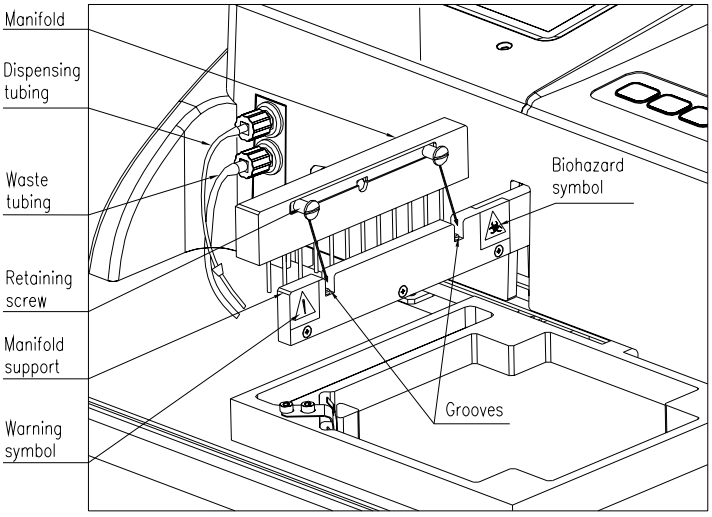

NOTE

If used for a long time, the wash solution might adhere to the manifold retaining screw or metal plate due to spillage and evaporation. The connector of the manifold should be cleaned in time to avoid rust or crystallizing affection washing effect.

4.4 Monthly Maintenance

When used for a long period, the wash bottle, waste bottle, buffer bottle and distilled water bottle may have crystal deposits. Follow this procedure to wash the bottles every month:

1. Fill each bottle with 0.8L deionized water (40℃) and tighten the bottle cap, then shake the bottle.
2. Remove the bottle cap and use a brush to clean the inside wall and cap of the bottle. While cleaning, ensure no waste fluid is spilled out.

4.5 As-Needed Maintenance

BIOHAZARD

Wear gloves while performing the cleaning.

Prior to any servicing or shipment, the instrument should be disinfected and cleaned to prevent from biohazardous infection.

4.5.1 Cleaning Fluidic System

1 Fill wash2 bottle with sufficient distilled water or deionized water at about 40℃.

2 Run a rinse procedure for about 30s to clean the tubing and manifold thoroughly. The rinse procedure should be launched for at least once.

3 Use hot water (40℃) to wipe the external surfaces of the bottles and tubing.

4.5.2 Cleaning Mechanical Parts

1 Turn off the system and unplug the power cord.

2 Remove the manifold and wipe the metal plates in the grooves using clean cotton swab dipped with ethanol (50%), then wipe the surfaces of the manifold support.

3 Wipe the retaining screws on manifold using clean cotton swab dipped with ethanol (50%), then wipe the surfaces of the dispense needles, aspirate needles and entire manifold.

4 Use clean cotton swab dipped with ethanol (50%) to wipe the surfaces of the plate carrier.

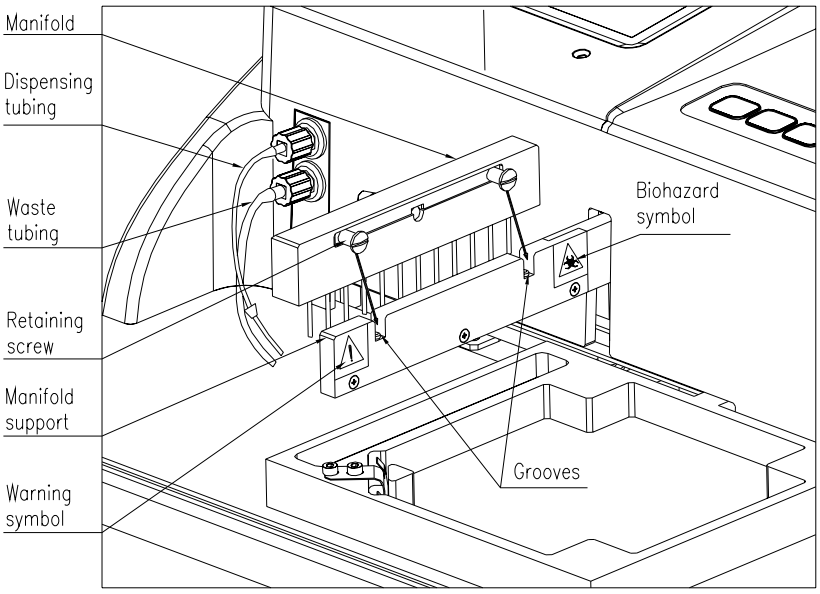

WARNING

The needles and leaf spring are edged and can cause scratches to human body. Exercise caution while performing the cleaning job.

5 Troubleshooting

NOTE

When alarm occurs, press any key to cancel the alarm and operate according to the screen prompts.

5.1 Manifold Failure

If the check mode is selected, when the connection of the manifold is contaminated or the manifold is not in the right position, the following information will be displayed during washing:

```
        Error!
Please check the manifold !
Press OK to continue or
EXIT to cancel !
```

You can follow this procedure to recover the failure:

1 Check if the manifold is placed correctly and not tilted, place it level if needed. Press ***OK*** and check if the instrument works normally; or

2 Lift up the manifold, then wipe the retaining screws and metal plates with clean cotton cloth dipped with ethanol. Install the manifold properly and press ***OK***; or

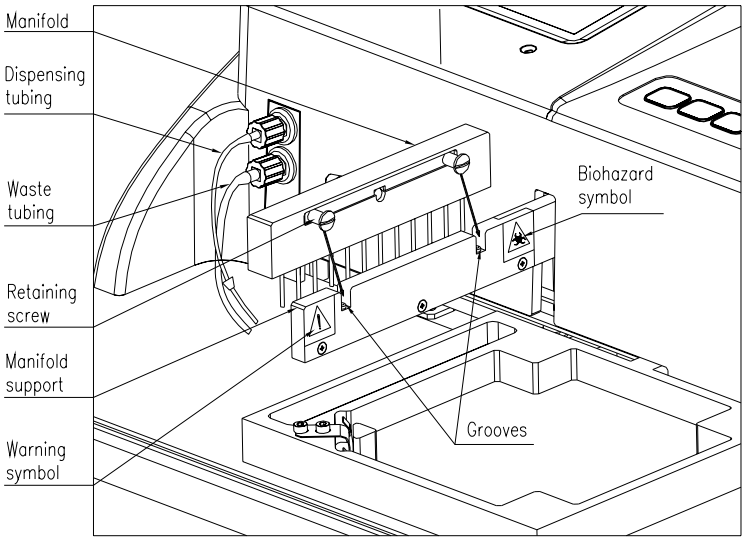

3 Restart the washer and run the wash program correctly.

4 If things like removing manifold during wash do not happen, in the meantime standard micro plate is used with no conspicuous dimension difference between the manifold and the micro plate, the default mode—No check（ ）can be used.

5 If the error remains, please contact Mindray Customer Service Department or your local distributor.

5.2 Movement Error

When error occurs during startup or other movement, the screen displays as follows:

```
Error!
XXXX movement error !
Restart or see the user
manual !
```

“XXXX” refers to horizontal or vertical.

You can correct the error using the following methods:

1 Switch off the power and restart the instrument; or

2 Switch off the instrument power. In case of horizontal movement error, move the plate carrier back and forth for 5 times. In case of vertical movement error, move the manifold up and down for 5 times. Then restart the instrument and check if it works normally.

3 If the error remains, please contact Mindray Customer Service Department or your local distributor.

5.3 Dispense Needle Error

If some dispense needle dispenses little or no wash solution during washing process, you can restore the error using the following methods:

1 Check if the wash bottle is connected to the washer correctly. Reconnect the tubing if needed; or

2 Check if the fluidic tubing is creased, stretch it if necessary; or

3 The fluidic tubing may adhere to each other if not moved for a long time. As for tubing clamped by Solenoid Valve 1, first pull the outer tubing a little, then keep pressing the black end of Solenoid Valve 1 and pull the inner tubing. As for tubing clamped by Solenoid Valve 2, first run a rinse procedure for about 20s, then pull the tubing quickly when the dispense needle is dispensing liquid; or

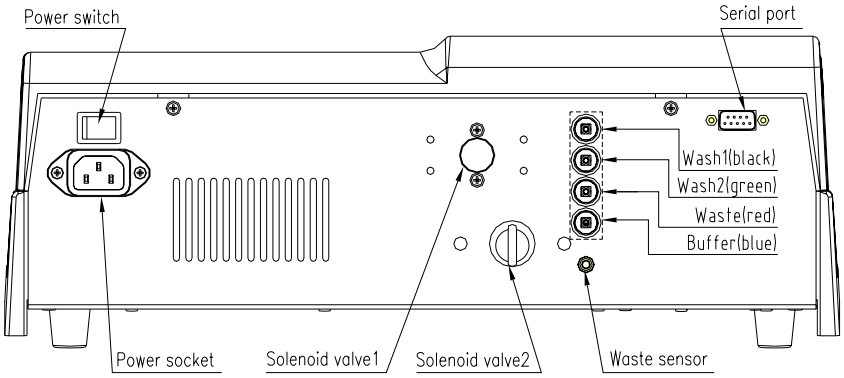

4 Check if the tubing end inside the wash bottle is blocked. If it is, remove the bottle cap and then unclog the tubing; or

5 Check if the manifold inlet and dispense needles are clogged. If they are, remove the foreign matters from the manifold inlet using tweezers, and use the supplied stainless needle to unclog the blocked dispense needles; or

6 Interchange the dispensing tubing and the waste tubing, then press ***MAINT*** to backflush the dispensing tubing with air flow, drawing the foreign matters into the waste bottle. Reconnect the tubing correctly and run a rinse procedure again.

7 If the error remains, please contact Mindray Customer Service Department or your local distributor.

5.4 Residue Too Much

When excessive residue exists in microwell during washing process, you can correct the error using the following methods:

1 Check if the waste/buffer bottle caps are tightened or sealed, or the fluidic tubing is connected properly to the bottle cap. Tighten the bottle caps and reconnect the fluidic tubing to the bottles; or

2 Check if the distance between aspirate needle and microwell bottom is too large and not within 0.1-0.4mm. You're recommended to set the bottom wash height using the Bot Auto Ht function.

3 Check if the fluidic tubing is creased, stretch it if necessary; or

4 Check if the tubing end inside the waste or buffer bottle is blocked. If it is, remove the bottle cap and then unclog the tubing; or

5 Check if the manifold inlet and aspirate needles are clogged. If they are, remove the foreign matters from the manifold inlet using tweezers, and use the supplied stainless needle to unclog the blocked aspirate needles; or

6 If the manifold has not been used for a long time, the connector might get rusty, leading to the change or lifting of the connector. Follow the 4.2.2 to clean the connector of the manifold. If the rust is very serious, use abrasive paper of small granule to rub the rust away from the manifold retaining screw.

7 Interchange the aspiration tubing and the waste tubing, then press ***MAINT*** to backflush the waste tubing with distilled water. Reconnect the tubing correctly and run a rinse procedure again.

8 If the error remains, please contact Mindray Customer Service Department or your local distributor.

5.5 Wash Solution Overflow

If the dispense needles dispense excessive wash solution into the microplate wells, resulting in overflow, you can correct the error using the following methods:

1 Check if the waste/buffer bottle caps are tightened or sealed, or the fluidic tubing is connected properly to the bottle cap. Tighten the bottle caps and reconnect the fluidic tubing to the bottles; or

2 Check if the fluidic tubing is creased, stretch it if necessary; or

3 Check if the aspirate needles are far from the well. Check the dispensing height and adjust the Disp Pos correctly; or

4 Check if foreign matters exist at Solenoid Valve 2 on the rear panel of the washer, disabling the valve core to clamp the tubing tightly. Remove the tubing clamped by Solenoid Valve 2 according to **4.3 Weekly Maintenance** and remove the foreign matters.

5 If the error remains, please contact Mindray Customer Service Department or your local distributor.

5.6 Collision of Manifold and Microplate

If the manifold collides with the microplate, causing the manifold to fall off or the plate is tilted, you can handle the error using the following methods:

1 If the microplate is not placed properly on the carrier, reset the plate and attach it to the carrier surface completely; or

2 Check the manifold position is set properly. Reset the crosswise aspiration positions (Left Pos and Right Pos), ensuring the aspirate needles lie inside the wells. Also check if the dispensing height is set correctly; or

3 Check if the plate carrier or manifold support is blocked. Remove the foreign matters if any.

4 If the error remains, please contact Mindray Customer Service Department or your local distributor.

WARNING

Servicing the instrument can be performed only by technical personnel approved by Mindray.

You must troubleshoot the instrument strictly as instructed by the operator's manual.

CAUTION

Use the consumables recommended by Mindray. Other consumables may degrade the system performance.

NOTE

The service life of consumables like plastic bottles, connectors or manifold is about 24 months and that of tubing is about 18 months. Please check the consumables and tubing frequently and replace them if necessary.

6 Appendix

This chapter covers the specifications, supplies and index.

Appendix A Specifications

Environment	**Indoor**
Power supply	100-240V~, 50/60Hz Power consumption: 100VA
Voltage fluctuation	±10%
Dimensions	400 mm×330 mm×145 mm (L×D×H)
Weight	7.2kg
Display	192×64 dot matrix LCD
Keypad	consists of 8 functional keys
Operating temperature	5°C-35°C
Storage temperature	0°C-40°C
Relative humidity	15%-85%
Operating altitude	-400m-3,000 m (-1,300 feet-6,500 feet)
Atmospheric pressure	70kPa-106kPa
Communication interface	RS-232
EMC	The equipment complies with the emission and immunity requirement description in this part of the EN 61326-1:2006 and EN 61326-2-6: 2006.
Safety Classification	Overvoltage type：II Pollution level: 2 Working Mode: Continuous IP(Ingress Protection):IPX0, (0 means not waterproof)

Appendix B Supplies

To ensure personal safety and system performance, use only supplies manufactured or recommended by Mindray. Contact the Mindray Customer Service Department or your local distributor for details.

Part	Part No.	Location	Remark
LCD displayer	801-0105-00001-00	On the panel	As needed
Connecting wire of the vacuum pump	801-0105-00004-00	On the bottom panel	As needed
Power supply board	801-0105-00002-00	On the bottom panel	As needed
12-pin washing head	801-0105-00010-00	Under the transparent shield	As needed
12-pin washing head	801-0105-00011-00	Under the transparent shield	As needed
Pipe silicon gel for PS valve1.6X3.2mm(FRU)	801-0105-00034-00	On the bottom panel	Consumables

Appendix C Index

A

aspirate 1-1, 3-2, 3-3, 3-5, 3-6, 3-7, 3-9, 3-13, 4-4, 5-3, 5-4

aspirate needle ...3-2, 3-3, 3-5, 3-6, 3-7, 3-9, 3-13, 4-4, 5-3, 5-4

aspirate position 3-2

aspiration.....3-1, 3-2, 3-5, 3-6, 3-8, 3-9, 3-10, 3-12, 3-14, 5-4

aspiration height..... 3-2, 3-8, 3-9

B

Bot Auto Ht.....3-2, 3-7, 3-9, 5-3

Bot Manu Ht 3-2, 3-8

bottle ...3, 5, 1-1, 1-3, 2-4, 2-5, 3-3, 3-15, 3-17, 3-18, 3-19, 4-2, 4-3, 4-4, 5-3, 5-4

bottom shape.....3-10, 3-11

bottom wash..... 3-10, 3-12, 5-3

C

Cent Pos..... 3-2, 3-3, 3-4

central position.....3-2

Channel..... 3-2, 3-3

Cross-headed screwdriver.....4-1

crosswise aspiration . 3-2, 3-10, 5-4

Cycle.....3-10

D

Disp Pos..... 3-2, 3-7, 5-4

dispense..... 1-1, 2-3, 3-1, 3-2, 3-7, 3-10, 3-12, 3-13, 3-17, 3-19, 4-2, 4-4, 5-3, 5-4

dispense needle.. 3-2, 3-7, 4-2, 4-4, 5-3, 5-4

dispensing position.....3-2, 3-7

dispensing volume3-10, 3-12, 3-13, 3-19

H

handle.....4, 3-19, 4-1

Hex wrench 4-1

L

Left Pos 3-2, 3-4, 5-4

M

maintenance. 1, 1-3, 3-18, 4-1, 4-2, 4-3, 5-4

manifold 4, 5, 1-1, 1-2, 2-2, 2-3, 2-5, 3-2, 3-3, 3-4, 3-7, 3-9, 3-17, 4-2, 4-3, 4-4, 5-1, 5-2, 5-3, 5-4, 5-5

manifold support 2-2, 2-3, 4-3, 4-4, 5-5

N

needle position..... 3-2

Needle tube..... 4-1

P

pre-rinse.....3-15, 3-16

program1-1, 3-10, 3-11, 3-15, 3-16, 3-17, 3-19

R

retaining screw 2-3, 4-4, 5-1

Right Pos 3-2, 3-5, 5-4

rinse . 1-3, 2-4, 3-1, 3-16, 3-18, 4-2, 4-4, 5-3, 5-4

rows 3-15, 3-16, 3-17

S

shaking 3-10, 3-14

Soak..... 3-10

solenoid valve..... 4-2

stainless needle 4-2, 5-3, 5-4

T

Tweezers 4-1

W

wash mode 3-10, 3-11

wash program. 1-3, 3-1, 3-10, 3-15, 3-16, 3-17, 3-19, 4-2, 5-2

wash solution 5, 1-1, 1-3, 3-10, 3-11, 3-15, 3-16, 3-17, 3-19, 4-1, 4-2, 5-3, 5-4

waste .. 2, 3, 4, 5, 1-1, 1-2, 1-3, 2-2, 2-3, 2-4, 2-5, 3-3, 3-15, 3-17, 3-19, 4-1, 4-2, 4-3, 5-3, 5-4

P/N: 0105-20-63148 (5.0)